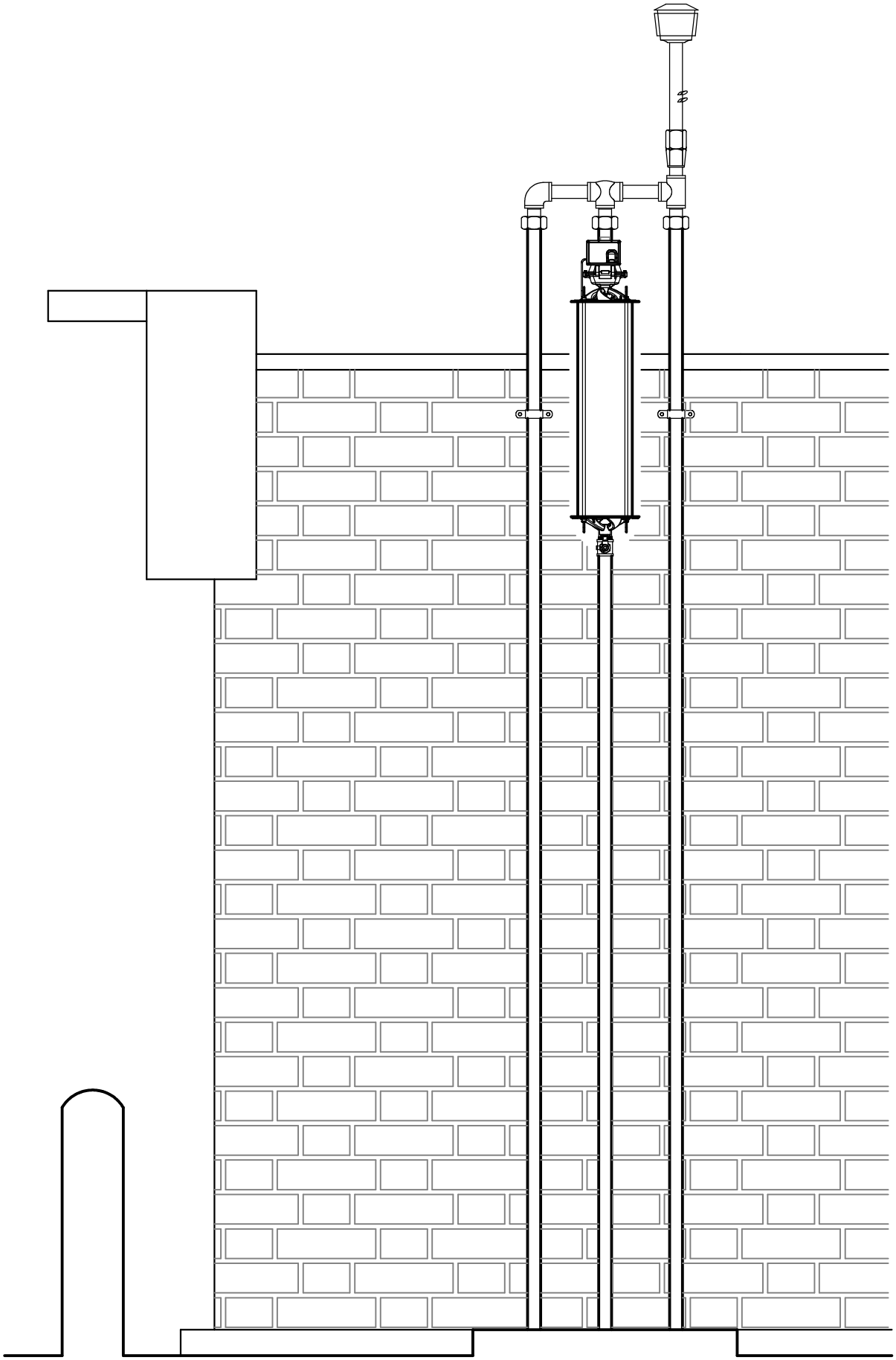

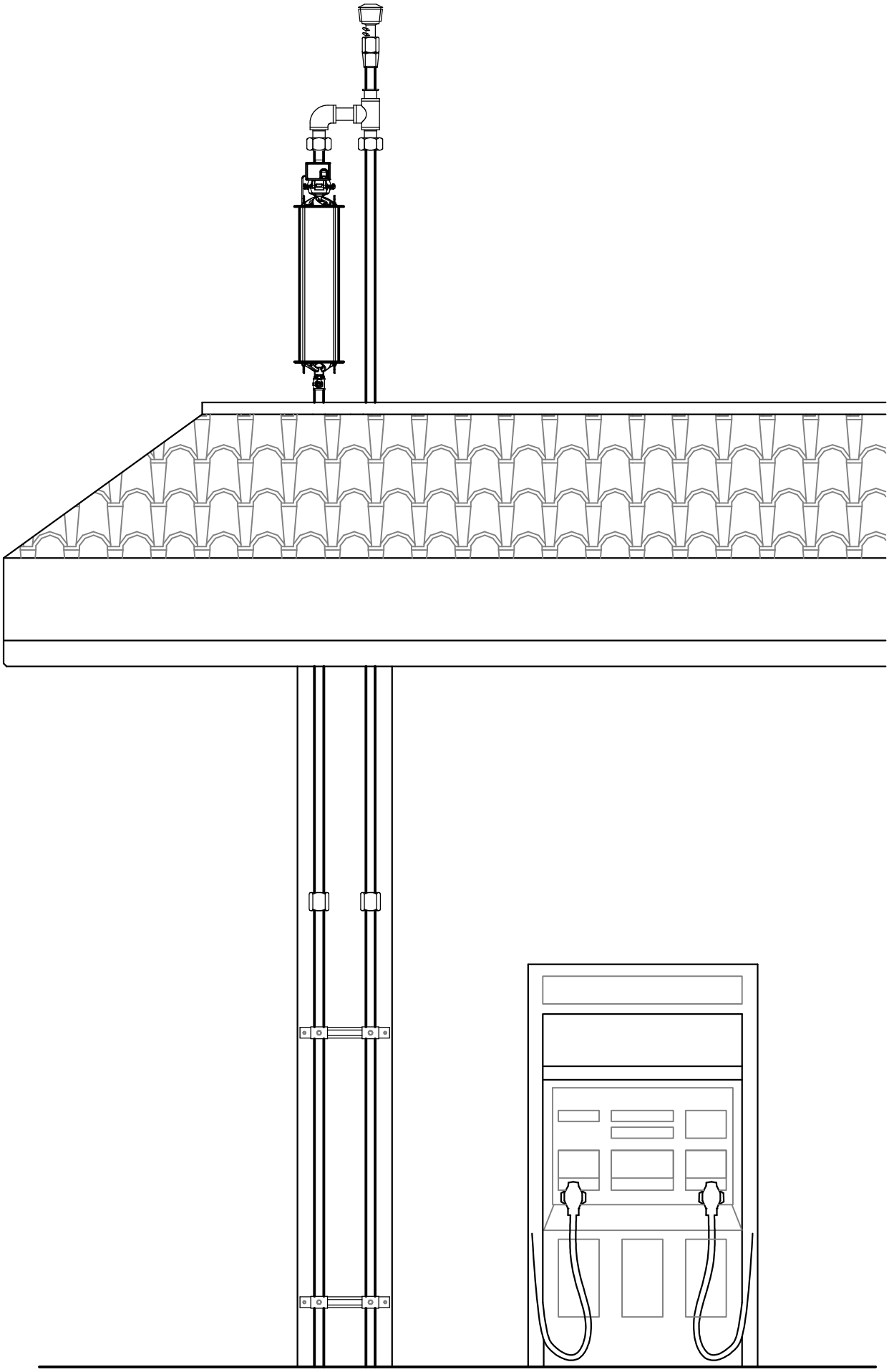

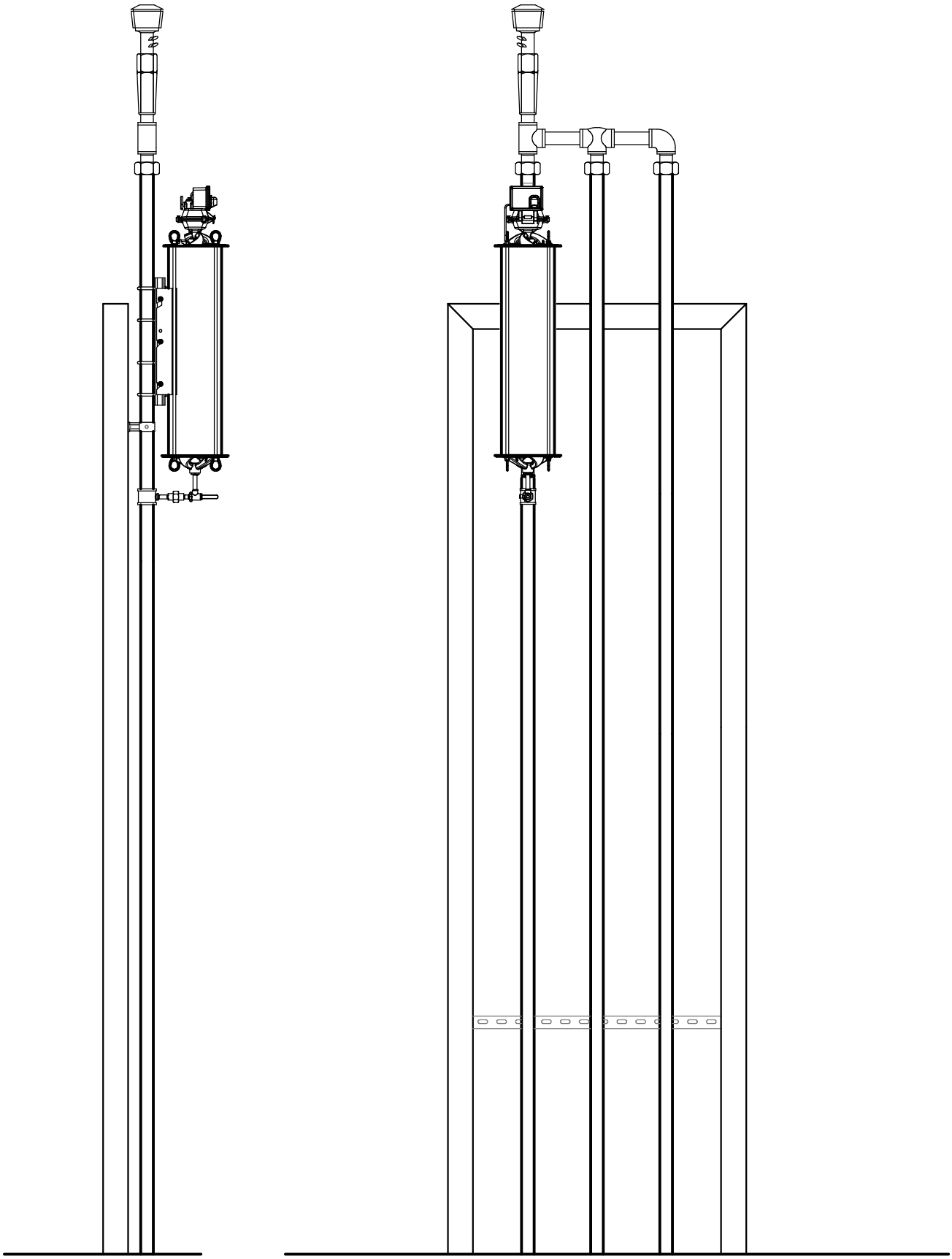

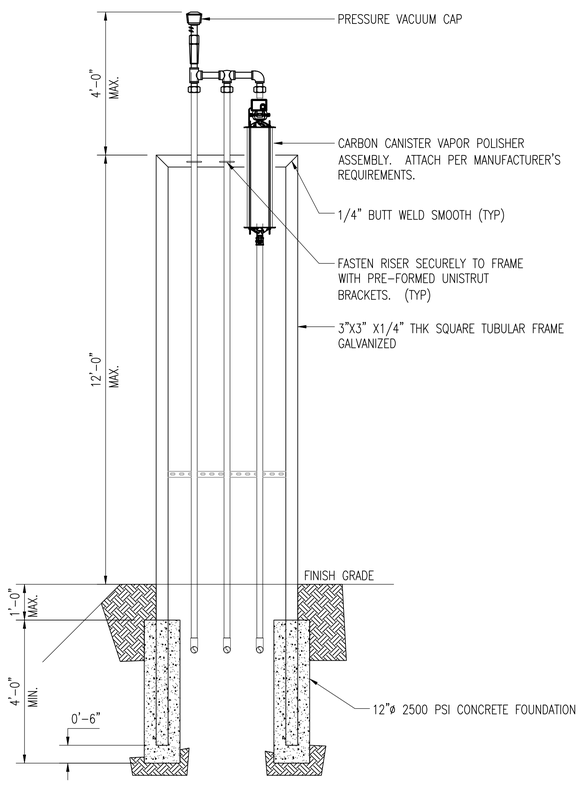

FRAME AND FOUNDATIONS
1/4"=1'-0"

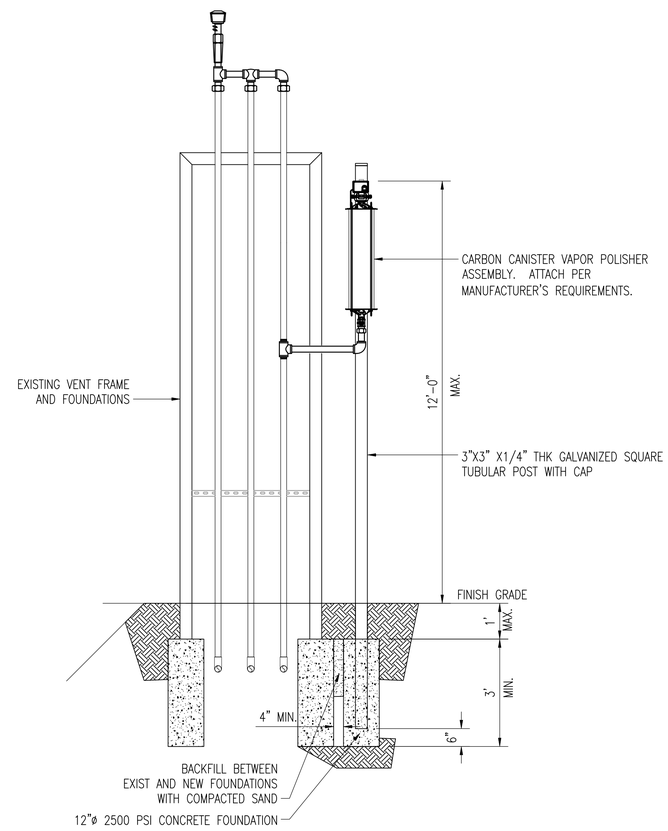

STAND ALONE FRAME
1/2" = 1'-0"

NOTES:

THE VENT DISCHARGE SHALL BE LOCATED AND DIRECTED SO THAT VAPORS WILL DISPERSE. VAPORS SHALL BE DIRECTED UPWARD AND HORIZONALLY AWAY FROM ADJACENT WALLS. VENT OUTLETS SHALL BE LOCATED SO AS NOT TO BE TRAPPED BY EAVES OR OTHER OBSTRUCTIONS AND SHALL BE AT LEAST 5 FEET FROM BUILDING OPENINGS. DISCHARGE SHALL NOT BE LESS THAN 12' FROM FINISH GRADE. VENTS SHALL BE INSTALLED IN ACCORDANCE WITH NFPA 30(2008).

VENT RISERS SHOULD STAND NO LESS THAN 5' FROM THE OUTSIDE OF CURB.

THE CONTRACTOR IS RESPONSIBLE FOR SHORING AND THE PROTECTION IN PLACE OF EXISTING FACILITIES.

VEEDER-ROOT

125 Powder Forest Drive
PO Box 2003
Simsbury, CT
06070

ALLIANCE MANAGER, AGENT FOR VEEDER ROOT

OWNERSHIP OF DOCUMENTS
THE RECIPIENT OF THESE DOCUMENTS ACKNOWLEDGES THAT THE CONSTRUCTION DOCUMENTS ARE OWNED BY VEEDER ROOT. THE RECIPIENT AGREES TO USE THE MATERIALS ONLY FOR THE LIMITED PURPOSES FOR WHICH VEEDER ROOT HAS MADE THE MATERIALS AVAILABLE. THE RECIPIENT SHALL NOT REUSE OR MAKE ANY MODIFICATION TO THE CONSTRUCTION DOCUMENTS WITHOUT PRIOR WRITTEN AUTHORIZATION BY A DESIGNATED REPRESENTATIVE OF VEEDER ROOT.

GENERAL NOTES:

EXISTING CONDITIONS
THE CONTRACTOR SHALL BE RESPONSIBLE FOR DETERMINING THE EXISTING CONTROLLING SITE CONDITIONS AND FOR COMPLIANCE WITH LOCAL ORDINANCES AND CURRENT CALIFORNIA BUILDING CODES.

APPLICABLE CODES
ALL WORK SHALL BE IN STRICT ACCORDANCE WITH THE LATEST EDITION OF THE CALIFORNIA BUILDING CODE AND REFERENCED STANDARDS.

PLANS AND PERMITS
THE CONTRACTOR SHALL OBTAIN ALL NECESSARY ENCROACHMENT PERMITS AND SHALL POSSESS APPROVED PLANS PRIOR TO BEGINNING OF CONSTRUCTION.

UTILITY LOCATIONS
THE CONTRACTOR WILL BE REQUIRED TO NOTIFY MEMBERS OF UNDERGROUND SERVICE ALERT (U.S.A.) 48 HOURS IN ADVANCE OF PERFORMING EXCAVATION WORK BY CALLING THE TOLL-FREE NUMBER (800) 227-2600. EXCAVATION FOR THE PURPOSE OF THIS REQUIREMENT, IS DEFINED AS BEING 18" OR MORE IN DEPTH BELOW THE EXISTING SURFACE.

DESIGN CRITERIA - PER 2007 CBC

SEISMIC LOADS

SITE INFORMATION		IMPORTANCE: 1	SITE CLASS= D
BASIC RESISTING SYSTEM: (REF: ASCE 7-05 TABLE 15.4-2)	R=2 Ω=2 Cd=2.5	SD1= 1.0	SDS=1.83
DESIGN BASE SHEAR: 0.92W	(BASE SHEAR EQ. 12.8-2) V= CsW V=0.92W	(MAX. BASE SHEAR EQ. 12.8-2) V= S_{D1}W/TR/I V=1.25W	(MIN. BASE SHEAR EQ. 12.8-5& 6) V= .5S_1W/R/I V=0.25W

PRELIMINARY DESIGN
NOT FOR CONSTRUCTION
Friday, October 17, 2008 3:30:50 AM

REVISIONS

DATE	BY	DESCRIPTION

STANDARD SHEET
0 1 2 3
ORIGINAL SCALE IS IN INCHES FOR REDUCED PLANS

APEX civil engineering
PO BOX 1196
Orangevale, CA 95662
T: (916)717-2812

VEEDER ROOT
CARBON CANISTER VAPOR POLISHER FRAME DETAILS

DATE 2-Sep-08
JOB NO. 20815
DRAWN SC
CHECKED BY: PPRESTON
SCALE AS SHOWN
SHEET S1 OF 1

CARBON CANISTER VAPOR POLISHER

CERTIFICATION NO: GVRC 005:071:001

LISTEE: Veeder Root, 125 Powder Forest Dr., Simsbury, CT 06070
Contact: John Fecteau (860) 651-2882 Fax (860) 651-2719
jfecteau@veeder.com

DESIGN: Model 861290 followed by -002 or -003 Carbon Canister Vapor Polisher. This device is a carbon filter for use with flammable liquid storage tanks and is intended to be connected in parallel with the existing pressure vacuum vent connected to the tank. This device consists of a canister filled with activated charcoal without a catalyst. Upon positive pressure, vapors from the tank pass through the charcoal and are collected via adsorption. During negative pressure conditions within the tank, the hydrocarbons are returned to the tank from the activated charcoal via desorption.

The outlet of the canister is provided with an electrically operated valve powered from an intrinsically safe source. The Vapor Polisher opens or closes the valve to minimize vapor pressure in the tank.

APPLICATION: Model 861290 Carbon Canister Vapor Polisher is intended to be only a secondary pressure management device. Model 861290-002 is intended for installation on a 2 inch vent pipe and Model 861290-003 is intended for installation on a 3 inch vent pipe.

INSTALLATION: To be installed in accordance with manufacturer's instructions, NFPA 30 and NFPA No. 30A and all applicable codes.

MARKING: The manufacturer's name, model, "Intrinsically Safe for Use in Class I, Group D when installed per Manual 577013-920.", "Temp Code T4", The ambient temperature range, -40°C $\leq$ Tamb $\leq$ +60°C., "Warning – Substitution of Components May Impair Intrinsic Safety.", "Warning – To Prevent ignition of flammable or combustible atmospheres, disconnect power before servicing." "Only for use as specified in the installation instructions." and UL Listing Mark

CERTIFICATION: Certified for use with Phase I and Phase II EVR systems

---

This certification is made pursuant to the authority granted to the California State Fire Marshal as contained in Sections 41955 through 41960 inclusive, California Health and Safety Code. The certification is based upon independent tests or other technical data submitted by the applicant. OSFM staff review the test results and/or other data but do not make an independent verification of any claims. This certification is not an endorsement or recommendation for the use of the item(s) specified. This certification should not be used to verify correct operational requirements or installation criteria. Refer to listee's data sheet, installation instructions and/or other suitable information sources.

DATE ISSUED: OCTOBER 16, 2008 **AUTHORIZED BY:** JAMES PARSEGIAN
Supervising Deputy State Fire Marshal
Vapor Recovery Program

YUNT.MH45891
Vapor Recovery System Accessories, Flammable Liquid

Page Bottom

Vapor Recovery System Accessories, Flammable Liquid

See General Information for Vapor Recovery System Accessories, Flammable Liquid

VEEDER-ROOT CO MH45891
6TH AVE AT BURNS CROSSING
ALTOONA, PA 16602 USA

Carbon canister vapor polisher, Model 861290, followed by -002 or -003.

Vapor line shear valve , Model 410347-001.

Last Updated on 2008-08-07

Questions? Notice of Disclaimer Page Top

Copyright © 2008 Underwriters Laboratories Inc.®

The appearance of a company's name or product in this database does not in itself assure that products so identified have been manufactured under UL's Follow-Up Service. Only those products bearing the UL Mark should be considered to be Listed and covered under UL's Follow-Up Service. Always look for the Mark on the product.

UL permits the reproduction of the material contained in the Online Certification Directory subject to the following conditions: 1. The Guide Information, Designs and/or Listings (files) must be presented in their entirety and in a non-misleading manner, without any manipulation of the data (or drawings). 2. The statement "Reprinted from the Online Certifications Directory with permission from Underwriters Laboratories Inc." must appear adjacent to the extracted material. In addition, the reprinted material must include a copyright notice in the following format: "Copyright © 2008 Underwriters Laboratories Inc.®"

State of California
AIR RESOURCES BOARD

EXECUTIVE ORDER VR-203-D

Vapor Systems Technologies, Inc.
Phase II Enhanced Vapor Recovery (EVR) System
Not Including In-Station Diagnostics (ISD)

WHEREAS, the California Air Resources Board (ARB) has established, pursuant to California Health and Safety Code sections 25290.1.2, 39600, 39601 and 41954, certification procedures for systems designed for the control of gasoline vapor emissions during motor vehicle fueling operations (Phase II EVR vapor recovery systems) in its CP-201, ***Certification Procedure for Vapor Recovery Systems at Gasoline Dispensing Facilities*** (Certification Procedure) as last amended May 25, 2006, incorporated by reference in title 17, California Code of Regulations, section 94011;

WHEREAS, ARB has established, pursuant to California Health and Safety Code sections 39600, 39601, 39607, and 41954, test procedures for determining the compliance of Phase II vapor recovery systems with emission standards;

WHEREAS, Vapor Systems Technologies, Inc. (VST) requested certification of the VST Phase II Enhanced Vapor Recovery System Not Including In-Station Diagnostics (VST Phase II EVR System) pursuant to the Certification Procedure by Executive Order VR-203-A issued on November 5, 2007, and last modified on July 3, 2008, by Executive Order VR-203-C;

WHEREAS, VST Phase II EVR System not including ISD was originally certified with a VST membrane processor to manage tank pressures and Veeder-Root has applied for certification of the Veeder-Root Vapor Filter as an alternate option for tank pressure management;

WHEREAS, the Certification Procedure provides that the ARB Executive Officer shall issue an Executive Order if he or she determines that the vapor recovery system conforms to all of the applicable requirements set forth in the Certification Procedure;

WHEREAS, G-01-032 delegates to the Chief of the Monitoring and Laboratory Division the authority to certify or approve modifications to certified Phase I and Phase II vapor recovery systems for gasoline dispensing facilities;

WHEREAS, I, William V. Loscutoff, Chief of the Monitoring and Laboratory Division, find that the VST Phase II EVR System conforms with all requirements set forth in the Certification Procedure, including compatibility when fueling vehicles equipped with onboard refueling vapor recovery systems, and results in a vapor recovery system which is at least 95 percent efficient and shall not exceed 0.38 pounds of hydrocarbons per 1,000 gallons of gasoline transferred when tested pursuant to TP-201.2, ***Efficiency and Emission Factor for Phase II Systems*** (October 8, 2003);

NOW, THEREFORE, IT IS HEREBY ORDERED that the VST Phase II EVR System is certified to be at least 95 percent efficient and does not exceed 0.38 pounds of hydrocarbon per 1,000 gallons of gasoline transferred in attended and/or self-service mode when used with an ARB-certified Phase I vapor recovery system and installed, operated, and maintained as specified herein and in the following exhibits. Exhibit 1 contains a list of the equipment certified for use with the VST Phase II EVR System. Exhibit 2 contains the performance standards, specifications, and typical installation drawings applicable to the VST Phase II EVR System as installed in a gasoline dispensing facility (GDF). Exhibit 3 contains the manufacturing performance standards and specifications. Exhibit 4 provides items required in conducting TP-201.3. Exhibit 5 is the liquid removal test procedure. Exhibit 6 is the VST ECS hydrocarbon sensor verification test procedure. Exhibit 7 is the VST and Veeder-Root Phase II EVR System Warranty. Exhibit 8 is the vapor pressure sensor verification test procedure. Exhibit 9 is a test procedure for determining the VST ECS vapor processor activation pressure. Exhibit 10 is the nozzle bag test procedure. Exhibit 11 is the Veeder-Root vapor polisher operability test procedure. Exhibit 12 is the Veeder-Root vapor polisher hydrocarbon emissions verification test procedure.

IT IS FURTHER ORDERED that compliance with the applicable certification requirements, rules and regulations of the Division of Measurement Standards of the Department of Food and Agriculture, the Office of the State Fire Marshal of the Department of Forestry and Fire Protection, the Division of Occupational Safety and Health of the Department of Industrial Relations, and the Division of Water Quality of the State Water Resources Control Board are made conditions of this certification.

IT IS FURTHER ORDERED that VST and Veeder-Root shall provide a warranty for the vapor recovery system and components to the initial purchaser. The warranty shall be passed on to each subsequent purchaser within the warranty period. The manufacturer of components listed in Exhibit 1 not manufactured by VST or Veeder-Root shall provide a warranty to each of their components certified herein. The warranty shall include the ongoing compliance with all applicable performance standards and specifications and shall comply with all warranty requirements in Section 16.5 of the Certification Procedure. VST, Veeder-Root, or other manufacturers may specify that the warranty is contingent upon the use of trained installers.

IT IS FURTHER ORDERED that every certified component manufactured by VST and Veeder-Root shall be performance tested by the manufacturer as provided in Exhibit 3.

IT IS FURTHER ORDERED that the certified VST Phase II EVR System shall be installed, operated, and maintained in accordance with the ***ARB Approved Installation, Operation, and Maintenance Manual***. A copy of this Executive Order and the ***ARB Approved Installation, Operation and Maintenance Manual*** shall be maintained at each GDF where a certified VST Phase II EVR System is installed.

IT IS FURTHER ORDERED that equipment listed in Exhibit 1, unless exempted, shall be clearly identified by a permanent identification showing the manufacturer's name, model number, and serial number. Within 60 days after the issuance of this Executive Order, VST and Veeder-Root shall provide a picture to ARB, in the format designated by the

Executive Officer or Executive Officer Delegate, showing permanent identification of each component as listed in Exhibit 1.

IT IS FURTHER ORDERED that any alteration in the equipment parts, design, installation, or operation of the system certified hereby is prohibited and deemed inconsistent with this certification, unless the alteration has been submitted in writing and approved in writing by the Executive Officer or Executive Officer delegate.

IT IS FURTHER ORDERED that the following requirements are made a condition of certification. The owner or operator of the VST Phase II EVR System shall conduct and pass the following tests no later than 60 days after startup and at least once in each twelve month period, using the following test procedures:

- TP-201.3, ***Determination of 2 Inch WC Static Pressure Performance of Vapor Recovery Systems of Dispensing Facilities*** (March 17, 1999);
- TP-201.4, ***Dynamic Back Pressure*** (July 3, 2002) in accordance with the condition listed in item 1 of the Vapor Collection section of Exhibit 2;
- Exhibit 4, ***Required Items in Conducting TP-201.3***;
- Exhibit 5, ***Liquid Removal Test Procedure***;
- Exhibit 6, ***VST ECS Hydrocarbon Sensor Verification Test Procedure*** (if a VST ECS membrane processor is installed);
- Exhibit 8, ***Vapor Pressure Sensor Verification Test Procedure***;
- Exhibit 9, ***Determination of VST ECS Processor Activation Pressure*** (if a VST ECS membrane processor is installed);
- Exhibit 11, ***Veeder-Root Vapor Polisher Operability Test Procedure*** (if a Veeder-Root Vapor Polisher is installed); and
- Exhibit 12, ***Veeder-Root Vapor Polisher Hydrocarbon Emissions Verification Test Procedure*** (if a Veeder-Root Vapor Polisher is installed)***.***

Shorter time periods may be specified in accordance with local district requirements. Notification of testing, and submittal of test results, shall be done in accordance with local district requirements and pursuant to policies established by that district. Alternative test procedures, including most recent versions of the test procedures listed above, may be used if determined by the ARB Executive Officer or Executive Officer delegate, in writing, to yield equivalent results.

IT IS FURTHER ORDERED that the following requirements are made a condition of certification. The owner or operator of the VST Phase II EVR System shall conduct, and pass, the following test no later than 60 days after startup using the following test procedure: Exhibit 10, ***Nozzle Bag Test Procedure***. Notification of testing, and submittal of test results, shall be done in accordance with local district requirements and pursuant to the policies established by that district. Alternative test procedures, including most recent versions of the test procedures listed above, may be used if determined by the ARB Executive Officer or Executive Officer delegate, in writing, to yield equivalent results.

IT IS FURTHER ORDERED that, except as provided above, local districts at their option will specify the testing, related sequencing, and testing frequency of the nozzle vapor valves, VST ECS Processor, and Veeder-Root Vapor Polisher. If the district requires the

nozzle vapor valve be tested, the test shall be conducted in accordance with Exhibit 10, ***Nozzle Bag Test Procedure***.

IT IS FURTHER ORDERED that the VST Phase II EVR System shall be compatible with gasoline in common use in California at the time of certification. The VST Phase II EVR System is not compatible with gasoline that has a methanol content greater than 5 percent, an ethanol content greater than 10 percent, or a methyl tert butyl ether (MTBE) content greater than 15 percent. Any modifications to comply with future California gasoline requirements shall be approved in writing by the Executive Officer or Executive Officer delegate.

IT IS FURTHER ORDERED that the certification of the VST Phase II EVR System is valid through December 1, 2011.

IT IS FURTHER ORDERED that Executive Order VR-203-C issued on July 3, 2008, is hereby superseded by this Executive Order. VST Phase II EVR Systems certified under Executive Order VR-203-A through C may remain in use at existing installations. This Executive Order shall apply to new installations or major modification of Phase II Systems with a throughput of less than or equal to 600,000 gallons per year. Use of this Executive Order for new installations or major modifications at a GDF with a throughput of more than 600,000 gallons per year is not authorized.

Executed at Sacramento, California, this 17th day of October 2008.

William V. Loscutoff, Chief
Monitoring and Laboratory Division

Attachments:

Exhibit 1	Equipment List
Exhibit 2	System Specifications
Exhibit 3	Performance Standards and Specifications
Exhibit 4	Required Items in Conducting TP-201.3
Exhibit 5	Liquid Removal Test Procedure
Exhibit 6	VST ECS Hydrocarbon Sensor Verification Test Procedure
Exhibit 7	Warranty
Exhibit 8	Vapor Pressure Sensor Verification Test Procedure
Exhibit 9	Determination of VST ECS Processor Activation Pressure
Exhibit 10	Nozzle Bag Test Procedure
Exhibit 11	Veeder-Root Vapor Polisher Operability Test Procedure
Exhibit 12	Veeder-Root Vapor Polisher Hydrocarbon Emissions Verification Test Procedure

State of California
AIR RESOURCES BOARD

EXECUTIVE ORDER VR-204-D

Vapor Systems Technologies, Inc.
Phase II Enhanced Vapor Recovery (EVR) System
Including Veeder-Root In-Station Diagnostics (ISD) System

WHEREAS, the California Air Resources Board (ARB) has established, pursuant to California Health and Safety Code sections 25290.1.2, 39600, 39601 and 41954, certification procedures for systems designed for the control of gasoline vapor emissions during motor vehicle fueling operations (Phase II EVR vapor recovery systems) in its CP-201, ***Certification Procedure for Vapor Recovery Systems at Gasoline Dispensing Facilities*** (Certification Procedure) as last amended May 25, 2006, incorporated by reference in title 17, California Code of Regulations, section 94011;

WHEREAS, ARB has established, pursuant to California Health and Safety Code sections 39600, 39601, 39607, and 41954, test procedures for determining the compliance of Phase II vapor recovery systems with emission standards;

WHEREAS, Vapor Systems Technologies, Inc. (VST) requested certification of the VST Phase II Enhanced Vapor Recovery System Including Veeder-Root In-Station Diagnostics (VST Phase II EVR System Including ISD) pursuant to the Certification Procedure by Executive Order VR-204-A issued on April 1, 2008, and last modified on July 3, 2008, by Executive Order VR-204-C;

WHEREAS, VST Phase II EVR System Including ISD was originally certified with a VST membrane processor to manage tank pressures and Veeder-Root has applied for certification of the Veeder-Root Vapor Filter as an alternate option for tank pressure management to the VST membrane processor;

WHEREAS, the Certification Procedure provides that the ARB Executive Officer shall issue an Executive Order if he or she determines that the vapor recovery system conforms to all of the applicable requirements set forth in the Certification Procedure;

WHEREAS, G-01-032 delegates to the Chief of the Monitoring and Laboratory Division the authority to certify or approve modifications to certified Phase I and Phase II vapor recovery systems for gasoline dispensing facilities;

WHEREAS, I, William V. Loscutoff, Chief of the Monitoring and Laboratory Division, find that the VST Phase II EVR System Including ISD conforms with all requirements set forth in the Certification Procedure, including compatibility when

fueling vehicles equipped with onboard refueling vapor recovery systems, and results in a vapor recovery system which is at least 95 percent efficient and shall not exceed 0.38 pounds of hydrocarbons per 1,000 gallons of gasoline transferred when tested pursuant to TP-201.2, ***Efficiency and Emission Factor for Phase II Systems*** (October 8, 2003);

NOW, THEREFORE, IT IS HEREBY ORDERED that the VST Phase II EVR System Including ISD is certified to be at least 95 percent efficient and does not exceed 0.38 pounds of hydrocarbon per 1,000 gallons of gasoline transferred in attended and/or self-service mode when used with an ARB-certified Phase I vapor recovery system and installed, operated, and maintained as specified herein and in the following exhibits. Exhibit 1 contains a list of the equipment certified for use with the VST Phase II EVR System including Veeder-Root ISD. Exhibit 2 contains the performance standards, specifications, and typical installation drawings applicable to the VST Phase II EVR System Including Veeder-Root ISD as installed in a gasoline dispensing facility (GDF). Exhibit 3 contains the manufacturing performance standards and specifications. Exhibit 4 provides items required in conducting TP-201.3. Exhibit 5 is the liquid removal test procedure. Exhibit 6 is the VST ECS hydrocarbon sensor verification test procedure. Exhibit 7 is the VST and Veeder-Root Phase II EVR System Including Veeder-Root ISD Warranty. Exhibit 8 is the vapor pressure sensor verification test procedure. Exhibit 9 is a test procedure for determining the VST ECS vapor processor activation pressure. Exhibit 10 is the nozzle bag test procedure. Exhibit 11 is the Veeder-Root vapor polisher operability test procedure. Exhibit 12 is the Veeder-Root vapor polisher hydrocarbon emissions verification test procedure. Exhibit 13 is the operability test procedure for the Veeder-Root ISD flow meter.

IT IS FURTHER ORDERED that compliance with the applicable certification requirements, rules and regulations of the Division of Measurement Standards of the Department of Food and Agriculture, the Office of the State Fire Marshal of the Department of Forestry and Fire Protection, the Division of Occupational Safety and Health of the Department of Industrial Relations, and the Division of Water Quality of the State Water Resources Control Board are made conditions of this certification.

IT IS FURTHER ORDERED that VST and Veeder-Root shall provide a warranty for the vapor recovery system and components to the initial purchaser. The warranty shall be passed on to each subsequent purchaser within the warranty period. The manufacturer of components listed in Exhibit 1 not manufactured by VST or Veeder-Root shall provide a warranty to each of their components certified herein. The warranty shall include the ongoing compliance with all applicable performance standards and specifications and shall comply with all warranty requirements in Section 16.5 of the Certification Procedure. VST, Veeder-Root, or other manufacturers may specify that the warranty is contingent upon the use of trained installers.

IT IS FURTHER ORDERED that every certified component manufactured by VST and Veeder-Root shall be performance tested by the manufacturer as provided in Exhibit 3.

IT IS FURTHER ORDERED that the certified VST Phase II EVR System Including Veeder-Root ISD shall be installed, operated, and maintained in accordance with the ***ARB Approved Installation, Operation, and Maintenance Manual***. A copy of this Executive Order and the ***ARB Approved Installation, Operation and Maintenance Manual*** shall be maintained at each GDF where a certified VST Phase II EVR System Including Veeder-Root ISD is installed.

IT IS FURTHER ORDERED that equipment listed in Exhibit 1, unless exempted, shall be clearly identified by a permanent identification showing the manufacturer's name, model number, and serial number. Within 60 days after the issuance of this Executive Order, VST and Veeder-Root shall provide a picture to ARB, in the format designated by the Executive Officer or Executive Officer Delegate, showing permanent identification of each component as listed in Exhibit 1.

IT IS FURTHER ORDERED that any alteration in the equipment parts, design, installation, or operation of the system certified hereby is prohibited and deemed inconsistent with this certification, unless the alteration has been submitted in writing and approved in writing by the Executive Officer or Executive Officer delegate.

IT IS FURTHER ORDERED that the following requirements are made a condition of certification. The owner or operator of the VST Phase II EVR System Including Veeder-Root ISD shall conduct and pass the following tests no later than 60 days after startup and at least once in each twelve month period, using the following test procedures:

- TP-201.3, ***Determination of 2 Inch WC Static Pressure Performance of Vapor Recovery Systems of Dispensing Facilities*** (March 17, 1999);
- TP-201.4, ***Dynamic Back Pressure*** (July 3, 2002) in accordance with the condition listed in item 1 of the Vapor Collection section of Exhibit 2;
- Exhibit 4, ***Required Items in Conducting TP-201.3***;
- Exhibit 5, ***Liquid Removal Test Procedure****;*
- Exhibit 6, **VST ECS *Hydrocarbon Sensor Verification Test Procedure*** *(if a VST ECS membrane processor is installed)*;
- Exhibit 8, ***Vapor Pressure Sensor Verification Test Procedure****;*
- Exhibit 9, ***Determination of VST ECS Processor Activation Pressure*** *(if a VST ECS membrane processor is installed)****;***
- Exhibit 11, ***Veeder-Root Vapor Polisher Operability Test Procedure*** (if a Veeder-Root Vapor Polisher is installed);
- Exhibit 12, ***Veeder-Root Vapor Polisher Hydrocarbon Emissions Verification Test Procedure*** (if a Veeder-Root Vapor Polisher is installed); and

- Exhibit 13, ***Operability Test Procedure for the Veeder-Root ISD Flow Meter.***

Shorter time periods may be specified in accordance with local district requirements. Notification of testing, and submittal of test results, shall be done in accordance with local district requirements and pursuant to policies established by that district. Alternative test procedures, including most recent versions of the test procedures listed above, may be used if determined by the ARB Executive Officer or Executive Officer delegate, in writing, to yield equivalent results.

IT IS FURTHER ORDERED that the following requirements are made a condition of certification. The owner or operator of the VST Phase II EVR System Including Veeder-Root ISD shall conduct, and pass, the following tests no later than 60 days after startup using the following test procedure: Exhibit 10, ***Nozzle Bag Test Procedure***. Notification of testing, and submittal of test results, shall be done in accordance with local district requirements and pursuant to the policies established by that district. Alternative test procedures, including most recent versions of the test procedures listed above, may be used if determined by the ARB Executive Officer or Executive Officer delegate, in writing, to yield equivalent results.

IT IS FURTHER ORDERED that, except as provided above, local districts at their option will specify the testing, related sequencing, and testing frequency of the nozzle vapor valves, VST ECS Membrane Processor, and Veeder-Root Vapor Polisher. If the district requires the nozzle vapor valve be tested, the test shall be conducted in accordance with Exhibit 10, ***Nozzle Bag Test Procedure***.

IT IS FURTHER ORDERED that the VST Phase II EVR System Including Veeder-Root ISD shall be compatible with gasoline in common use in California at the time of certification. The VST Phase II EVR System Including Veeder-Root ISD is not compatible with gasoline that has a methanol content greater than 5 percent, an ethanol content greater than 10 percent, or a methyl tert butyl ether (MTBE) content greater than 15 percent. Any modifications to comply with future California gasoline requirements shall be approved in writing by the Executive Officer or Executive Officer delegate.

IT IS FURTHER ORDERED that the certification of the VST Phase II EVR System Including Veeder-Root ISD is valid through April 1, 2012.

IT IS FURTHER ORDERED that Executive Order VR-204-C issued on July 3, 2008, is hereby superseded by this Executive Order. VST Phase II EVR System Including Veeder-Root ISD certified under Executive Order VR-204-A through C may remain in use at existing installations. This Executive Order shall apply to new installations or major modification of Phase II Systems with a throughput of more than 600,000 gallons per year. The installation of the Veeder-

Root ISD System is not authorized on a GDF with a throughput of less than or equal to 600,000 gallons per year.

Executed at Sacramento, California, this 17th day of October 2008

William V. Loscutoff, Chief
Monitoring and Laboratory Division

Attachments:

Exhibit 1	Equipment List
Exhibit 2	System Specifications
Exhibit 3	Performance Standards and Specifications
Exhibit 4	Required Items in Conducting TP-201.3
Exhibit 5	Liquid Removal Test Procedure
Exhibit 6	VST ECS Hydrocarbon Sensor Verification Test Procedure
Exhibit 7	Warranty
Exhibit 8	Vapor Pressure Sensor Verification Test Procedure
Exhibit 9	Determination of VST ECS Processor Activation Pressure
Exhibit 10	Nozzle Bag Test Procedure
Exhibit 11	Veeder-Root Vapor Polisher Operability Test Procedure
Exhibit 12	Veeder-Root Vapor Polisher Hydrocarbon Emissions Verification Test Procedure
Exhibit 13	ISD Vapor Flow Meter Operability Test Procedure