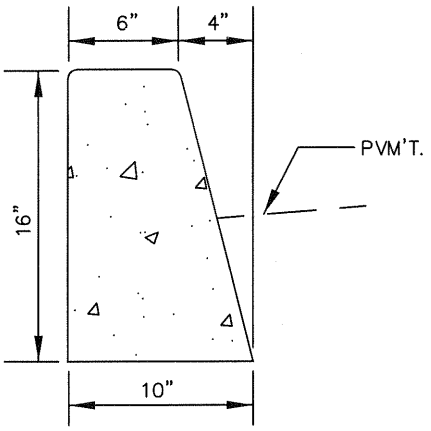

TYPE "A"

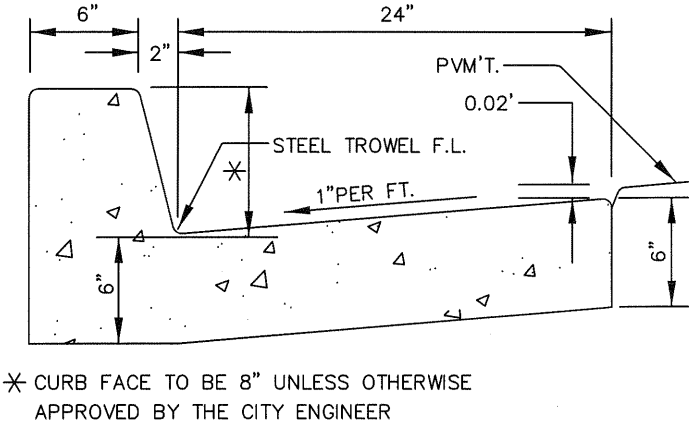

✳ CURB FACE TO BE 8" UNLESS OTHERWISE APPROVED BY THE CITY ENGINEER

TYPE "B"

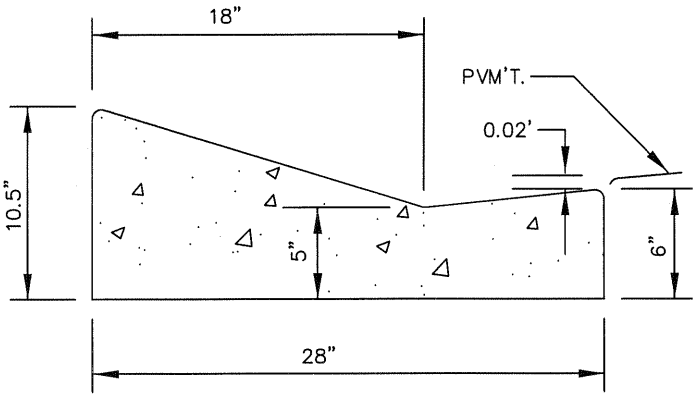

TYPE "V"

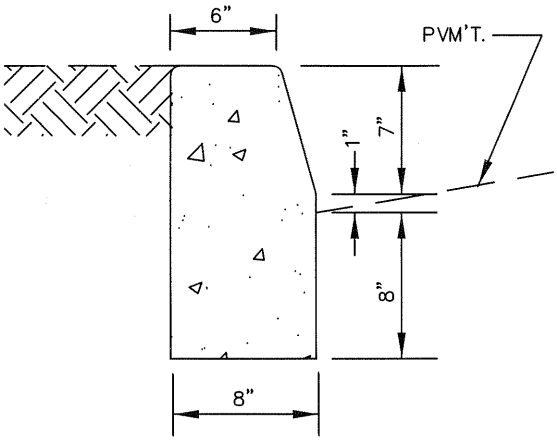

TYPE "D"

NOTES

1. EPOXY BONDING COMPOUND, HUNT'S H.B.-100 OR EQUAL, MAY BE USED IN LIEU OF THE 12" NO. 4 BARS AT 4' O.C.
2. CONCRETE SHALL BE CLASS 520-C-2500 PER SECTION 201 S.S.P.W.C. CURING COMPOUND SHALL BE TYPE 1-D.
3. ALL EXPOSED CORNERS SHALL BE 1/2" RADIUS.
4. USE TYPE "A" AND TYPE "V" CURB FOR REPLACEMENT ONLY.
5. TYPE "C" CURB SHALL HAVE SLIP JOINTS IN LONGITUDINAL RE-BAR AT 60' O.C. & CUT PLATES AT 20' O.C.

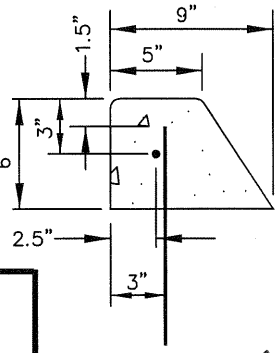

TYPE "C"

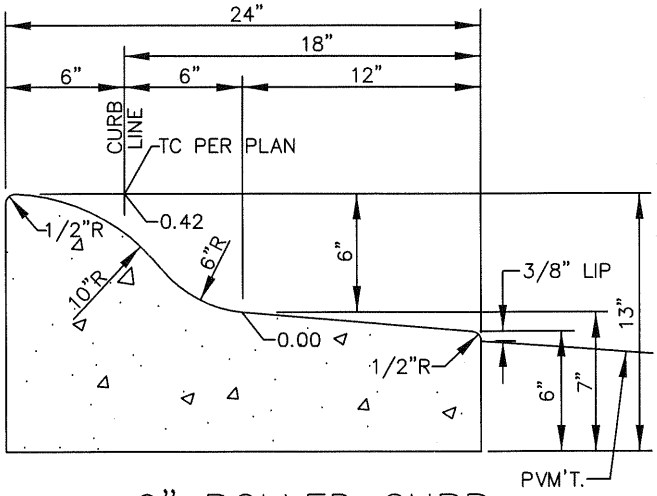

6" ROLLED CURB FOR MEDIAN APPLICATIONS AND OTHER SPECIAL CASES

REGISTERED PROFESSIONAL ENGINEER
JOHN P. SULLIVAN
No. 24079
Exp. 12-31-07
CIVIL
STATE OF CALIFORNIA

APPROVED BY: JOHN P. SULLIVAN CITY ENGINEER			24079 RCE	8/08/06 DATE
RECOMMENDED: ASSISTANT CITY ENGINEER			33340 RCE	8/07/06 DATE
REV	DESCRIPTION	BY	APP'D	DATE

CITY OF ONTARIO

CURBS

STANDARD DRAWING NUMBER

1201